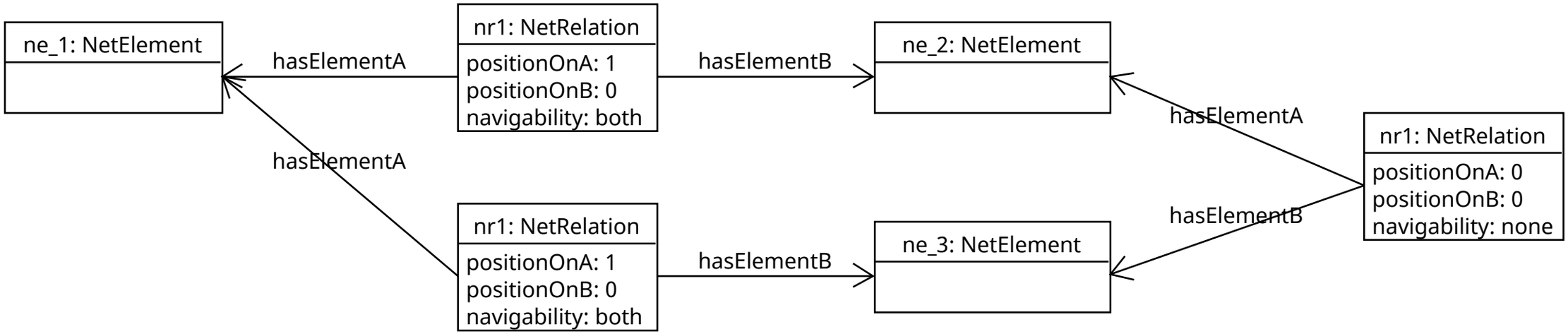
ne_1: NetElement
hasElementA
nr1: NetRelation
positionOnA: 1
positionOnB: 0
navigability: both
hasElementB
ne_2: NetElement
hasElementA
nr1: NetRelation
positionOnA: 0
positionOnB: 0
navigability: none
hasElementA
nr1: NetRelation
positionOnA: 1
positionOnB: 0
navigability: both
hasElementB
ne_3: NetElement
hasElementB

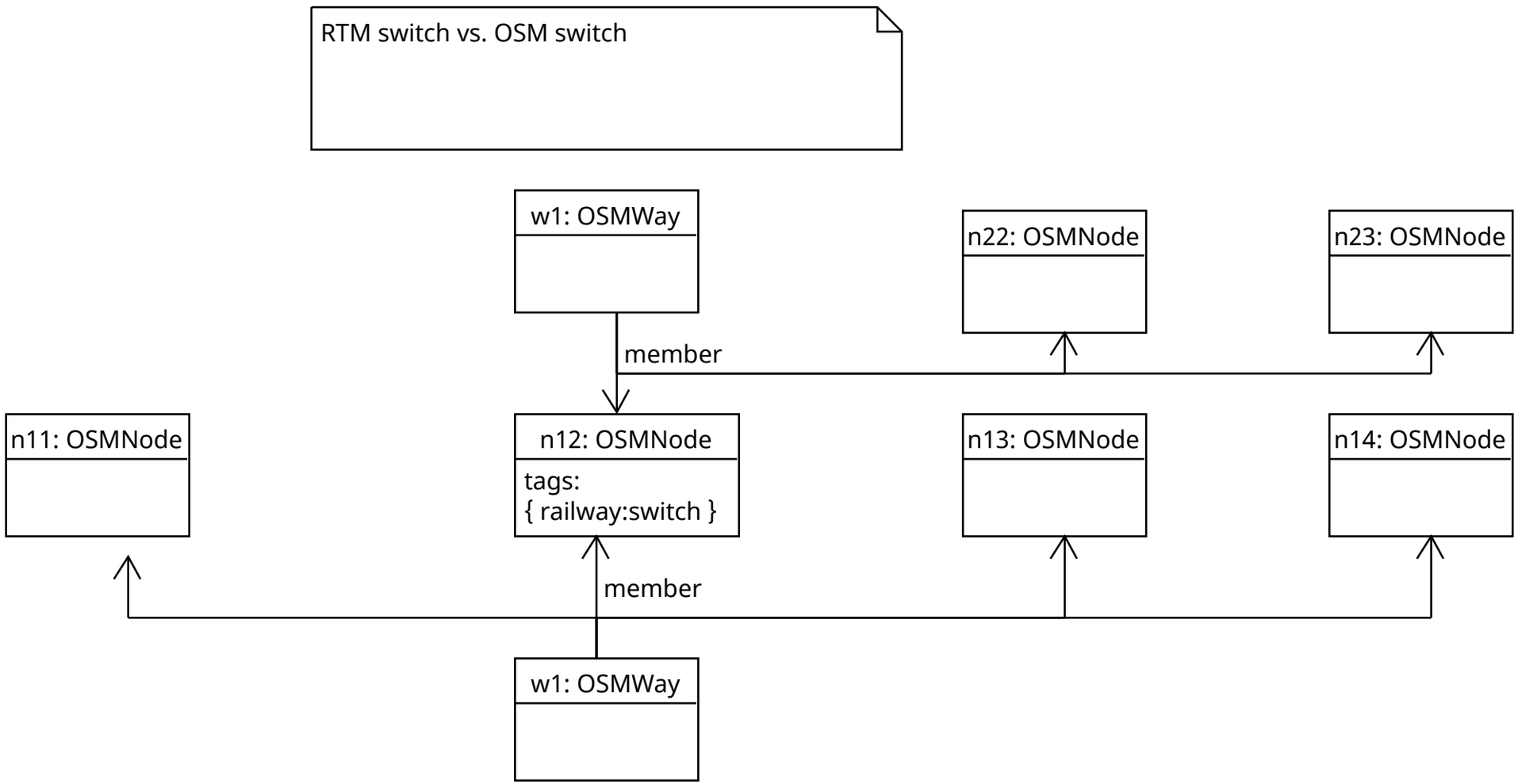
RTM switch vs. OSM switch
w1: OSMWay
n22: OSMNode
n23: OSMNode
member
n11: OSMNode
n12: OSMNode
tags:
{ railway:switch }
n13: OSMNode
n14: OSMNode
member
w1: OSMWay